CAMBRIDGE
International Education

Cambridge IGCSE™

DESIGN & TECHNOLOGY **0445/42**

Paper 4 Systems and Control **October/November 2025**

MARK SCHEME

Maximum Mark: 50

Published

This mark scheme is published as an aid to teachers and candidates, to indicate the requirements of the examination. It shows the basis on which Examiners were instructed to award marks. It does not indicate the details of the discussions that took place at an Examiners' meeting before marking began, which would have considered the acceptability of alternative answers.

Mark schemes should be read in conjunction with the question paper and the Principal Examiner Report for Teachers.

Cambridge International will not enter into discussions about these mark schemes.

Cambridge International is publishing the mark schemes for the October/November 2025 series for most Cambridge IGCSE, Cambridge International A and AS Level components, and some Cambridge O Level components.

This document consists of **16** printed pages.

© Cambridge University Press & Assessment 2025

https://xtremepape.rs/

Generic Marking Principles

These general marking principles must be applied by all examiners when marking candidate answers. They should be applied alongside the specific content of the mark scheme or generic level descriptions for a question. Each question paper and mark scheme will also comply with these marking principles.

GENERIC MARKING PRINCIPLE 1:

Marks must be awarded in line with:

- the specific content of the mark scheme or the generic level descriptors for the question
- the specific skills defined in the mark scheme or in the generic level descriptors for the question
- the standard of response required by a candidate as exemplified by the standardisation scripts.

GENERIC MARKING PRINCIPLE 2:

Marks awarded are always **whole marks** (not half marks, or other fractions).

GENERIC MARKING PRINCIPLE 3:

Marks must be awarded **positively**:

- marks are awarded for correct/valid answers, as defined in the mark scheme. However, credit is given for valid answers which go beyond the scope of the syllabus and mark scheme, referring to your Team Leader as appropriate
- marks are awarded when candidates clearly demonstrate what they know and can do
- marks are not deducted for errors
- marks are not deducted for omissions
- answers should only be judged on the quality of spelling, punctuation and grammar when these features are specifically assessed by the question as indicated by the mark scheme. The meaning, however, should be unambiguous.

GENERIC MARKING PRINCIPLE 4:

Rules must be applied consistently, e.g. in situations where candidates have not followed instructions or in the application of generic level descriptors.

© Cambridge University Press & Assessment 2025

https://xtremepape.rs/

GENERIC MARKING PRINCIPLE 5: Marks should be awarded using the full range of marks defined in the mark scheme for the question (however; the use of the full mark range may be limited according to the quality of the candidate responses seen).
GENERIC MARKING PRINCIPLE 6: Marks awarded are based solely on the requirements as defined in the mark scheme. Marks should not be awarded with grade thresholds or grade descriptors in mind.

© Cambridge University Press & Assessment 2025

https://xtremepape.rs/

Annotations guidance for centres

Examiners use a system of annotations as a shorthand for communicating their marking decisions to one another. Examiners are trained during the standardisation process on how and when to use annotations. The purpose of annotations is to inform the standardisation and monitoring processes and guide the supervising examiners when they are checking the work of examiners within their team. The meaning of annotations and how they are used is specific to each component and is understood by all examiners who mark the component.

We publish annotations in our mark schemes to help centres understand the annotations they may see on copies of scripts. Note that there may not be a direct correlation between the number of annotations on a script and the mark awarded. Similarly, the use of an annotation may not be an indication of the quality of the response.

The annotations listed below were available to examiners marking this component in this series.

Annotations

Annotation	Meaning
?	Unclear
BOD	Benefit of the doubt
✗	Incorrect point
ECF	Error carried forward
N/A	Highlighting areas of text
NBOD	No benefit of doubt given
N/A	Off-page comment – allows comments to be entered off the page
REP	Repeat
SEEN	Indicates that the point has been noted, but no credit has been given
SEEN	Indicates that the point has been noted, but no credit has been given (big)

© Cambridge University Press & Assessment 2025

https://xtremepape.rs/

Annotation	Meaning
✓	Correct point
TV	Too vague
DET	Relevant detail

© Cambridge University Press & Assessment 2025

https://xtremepape.rs/

Section A

Question	Answer	Marks	Guidance
1(a)(i)	The composite material is **concrete**.	**1**	Accept reinforced concrete
1(a)(ii)	**Laminated wood** / plywood / chipboard	**1**	Allow GRP, carbon fibre, fibreglass, Kevlar and reinforced bamboo.
1(b)	The boat hull is a **shell** structure	**1**	

Question	Answer	Marks	Guidance
2(a)	The structure will remain rigid because of **triangulation** [1] The diagonal will **reinforce** the structure preventing any distortion [1]	**2**	Triangulation must be included for 2 marks.
2(b)	Force **Y** is **bending**.	**1**	
2(c)	Force **Z** is **shear**.	**1**	

© Cambridge University Press & Assessment 2025

https://xtremepape.rs/

Question	Answer	Marks	Guidance
3(a)	CAD/CAM will provide the following benefits: • Accuracy • Speed in batch production • 24/7 working • Reduction in errors • Reduction in labour force • Repeatability [2 × 1]	**2**	Allow any other valid benefits. Allow 'Fewer mistakes = less waste' Allow 'increase efficiency'.
3(b)	CAM examples could be: • Lathe, milling machine, router. • Laser cutter • 3D printer • Drill • Sewing machine • Router. • Robotic arm	**1**	Allow any other valid examples. Do not allow 'CNC' without machine name

Question	Answer	Marks	Guidance
4(a)	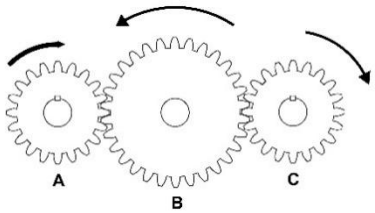	**2**	1 mark for each arrow correctly drawn.
4(b)	Gears **A** and **C** need to rotate with their shafts. Gear **B** is an idler so can rotate on the shaft	**2**	1 mark for each point made in explanation.

https://xtremepape.rs/

Question	Answer	Marks	Guidance
5	Lubrication can be used to: • Reduce the effects of friction • Reduce wear in the mechanism • Cool a mechanism • Reduce noise produced by the mechanism. [2 × 1]	**2**	AOVR 1 mark for each point made.

Question	Answer	Marks	Guidance
6	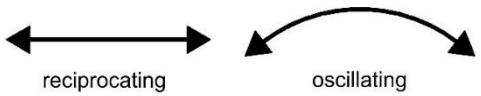 [2 × 1]	**2**	

Question	Answer	Marks	Guidance
7(a)	**A** – Battery [1] **B** – Switch (SPDT) [1] **C** – Light Emitting Diode (LED) [1]	**3**	3 × 1 marks Award mark for 'switch'.
7(b)	**R_1** and **R_2** are connected in **parallel** – 1 mark.	**1**	

https://xtremepape.rs/

Question	Answer	Marks	Guidance
8	**Push to Break** [1]	**1**	Allow 'press to break' Allow mark for understanding shown.

Question	Answer	Marks	Guidance
9	Reasons for difficulty in recycling should include: • Components are soldered into a circuit board • Many components are too small to remove • Components could be damaged when removing • It is not cost effective in many cases. • No recyclable materials / materials are toxic. [2 × 1]	**2**	Allow other valid reasons.

https://xtremepape.rs/

Section B

Question	Answer	Marks	Guidance
10(a)(i)	First order lever	**1**	
10(a)(ii)	Feature **A** is a gusset plate	**1**	
10(a)(iii)	Feature **A** is used to support the joints between the baseplate and side supports.	**1**	Award marks for understanding shown.
10(a)(iv)	If the ground is soft and if there were no baseplate the device would sink into the ground [1] The baseplate provides a larger surface area which is less likely to sink when pressure is applied to the lever arm [1] Efficiency of the peg puller is improved [1] The baseplate acts as a fulcrum [1]	**2**	Allow any other valid points. Explanation to include any two valid points, 2 marks. Award 2 marks for a full explanation of a single point.
10(a)(v)	The force acting on the ground is **compression**.	**1**	
10(a)(vi)	The force acting on surface **X** is **tension** [1] The force acting on surface **Y** is **compression** [1]	**2**	
10(a)(vii)	**Welding** is used to join the steel side plates to the steel lever arm.	**1**	Allow brazing. Do not allow riveting.
10(a)(viii)	force × 130 = 200 × 1500 [1] force = 300000 / 130 [1] force = **2307.7 N** [1]	**3**	Award 3 marks for correct answer with no working.
10(b)(i)	Accurately sketch / notes [1] Proportions suitable [1] 	**2**	

https://xtremepape.rs/

Question	Answer	Marks	Guidance
10(b)(ii)	Accurately sketch / notes / drawn in correct position [1] Proportions suitable [1] tie	**2**	If both strut and tie are shown 1 mark only
10(b)(iii)	Accurately sketch / notes / drawn in correct position [1] Proportions suitable [1] st	**2**	No mark for strut drawn with a single line. If both strut and tie are shown 1 mark only
10(c)(i)	Features affecting performance will include: • Knots • Shakes • Splits • Twisting • Finish or treatment needed on the timber [2 × 1]	**2**	Accept valid alternatives.
10(c)(ii)	The spacing pieces will: • Help to prevent twisting / warping of the joists [1] • Provide extra support to floor [1] • Maintain spacing between joists. [1] [2 × 1]	**2**	

https://xtremepape.rs/

Question	Answer	Marks	Guidance
10(c)(iii)	The spacing pieces are staggered across the width to allow screws / nails to be fitted. • Functional method [1] • Clear sketch / notes showing method [1] • List of fixings screws / nails / joist hangers [1] • Mechanical joint used / mortise and tenon / bridle joint.[1]	**3**	Example method
11(a)(i)	Other types of belt could be **flat**, **toothed** or **round**. [2 × 1]	**2**	Accept 'plain belt'. Sketches must be identified with a name for mark to be awarded.
11(a)(ii)	Reasons for the vee belt being most suitable are: • Transmit power very well • Limited slip between belt and pulleys / high friction force • Low noise and vibration levels • Easy to install and maintain.	**2**	Allow any other valid points. Explanation to include any two valid points, 2 marks. Award 2 marks for a full explanation of a single point.
11(b)(i)	The vee **pulley** transfers motion to the **crankshaft** causing it to rotate. This in turn causes the **connecting** rod to move the **piston** . [4 × 1]	**4**	1 mark for each word correctly used
11(b)(ii)	**Crank** [1] / **slider** [1] mechanism.	**2**	
11(b)(iii)	Area of piston = Πr^2 = 3.142 × 25^2 = **1963.75** (1963.495 on calculator) [1] Throw of piston = 12.5 × 2 = **25** [1] Volume displaced = 1963.75 × 25 = **49093.75 mm³** or **49 087.39** [1]	**3**	Award 3 marks for correct answer with no working.

https://xtremepape.rs/

Question	Answer	Marks	Guidance
11(c)(i))	Grease would not be suitable because: • It is too thick / viscous to flow through the oil holes. • The bearing also uses oil to carry away any particles from the bearing. • Grease would keep the particles in the bearing, allowing metal to metal contact.	**2**	Allow any other valid points. Explanation to include any two valid points, 2 marks. Award 2 marks for a full explanation of a single point.
11(c)(ii)	**Roller** or **ball** bearings could have been used. [2 × 1]	**2**	Accept needle bearings
11(c)(iii)	Benefits of plain bearings include: • Smaller diameter • Low maintenance • Plain bearings support higher loads.	**1**	Allow any other valid points.
11(d)(i)	Differences in use include: • More difficult to start bolt **B** in threaded hole / nut • Easier to start bolt **A** in threaded hole • Easy to cross thread bolt **B** when inserting • More turns needed to move bolt **B** through a set linear distance • Faster to insert bolt **A**.	**1**	AOVR
11(d)(ii)	• The core diameter of bolt **B** is larger than for bolt **A** due to smaller pitch and lower depth of thread • Larger diameter will have greater resistance to shear forces • Higher torque can be applied before the bolt will fail / shear. • More precise in transmitting motion	**2**	Allow any other valid points. Explanation to include any two valid points, 2 marks. Award 2 marks for a full explanation of a single point.
11(e)(i)	The velocity ratio of the worm gear is 30:1	**1**	

© Cambridge University Press & Assessment 2025

https://xtremepape.rs/

Question	Answer	Marks	Guidance
11(e)(ii)	Worm gear ratio 30:1 15 t:40 t ratio 2.666:1 [1] Total reduction ratio = 30 × 2.666 = **80:1** [1] Speed of 40 t gear = 850 / 80 = **10.625 rpm** [1]	**3**	Allow ecf from (d)(ii). Award 3 marks for correct answer with no working.
12(a)	<table><tr><th>material</th><th>conductor</th><th>insulator</th><th>semiconductor</th></tr><tr><td>aluminium</td><td>✓</td><td></td><td></td></tr><tr><td>germanium</td><td></td><td></td><td>✓</td></tr><tr><td>glass</td><td></td><td>✓</td><td></td></tr><tr><td>gold</td><td>✓</td><td></td><td></td></tr><tr><td>wood</td><td></td><td>✓</td><td></td></tr></table> [4 × 1]	**4**	No mark for more than one tick in insulator or semiconductor column
12(b)(i)	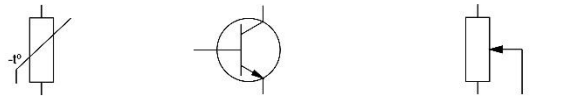 NTC thermistor NPN transistor potentiometer [3 × 1]	**3**	Award mark for thermistor without 'NTC'. Award mark for transistor without 'NPN' No mark for PNP transistor Allow variable resistor for **C.**
12(b)(ii)	Resistance will change [1] Direction of change [1] As temperature rises resistance falls As temperature falls resistance will rise.	**2**	Description must include both points for 2 marks.
12(b)(iii)	• The thermistor is placed in a potential divider with VR_1. • Increased heat causes resistance in thermistor to fall, increasing voltage at **X** • The signal from the potential divider passes through a current limiting resistor and into the base of the transistor • When the voltage at **X** is ⩾ 0.6 V the transistor switches on and voltage at the output is 0 V.	**3**	Explanation should include 3 points. Allow 2 marks for a full explanation of a single point.

https://xtremepape.rs/

Question	Answer	Marks	Guidance
12(b)(iv)	V_{out} = 9 × 422 / (5450 + 422) [1] = 3798 / 5872 [1] V_{out} = **0.6468 V** [1]	**3**	Award 3 marks for correct answer with no working.
12(b)(v)	The 5 kΩ resistor is a pull up resistor to make the output +9 V when the transistor is switched off. Prevents short circuiting.	**1**	Allow mark for understanding shown.
12(c)(i)	Logic gate D is a **NOT gate** / **inverter**. [1]	**1**	
12(c)(ii)	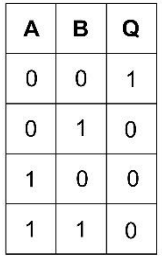 Column **A** correct [1], Column **B** correct [1]	**2**	Row 1 must be correct for either mark. Rows 2,3,4 can be any order but must not contain 0 0.
12(c)(iii)	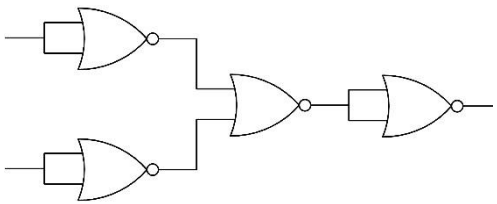	**2**	All NOR gates [1] All connections correct [1]

https://xtremepape.rs/

Question	Answer	Marks	Guidance
12(c)(iv)	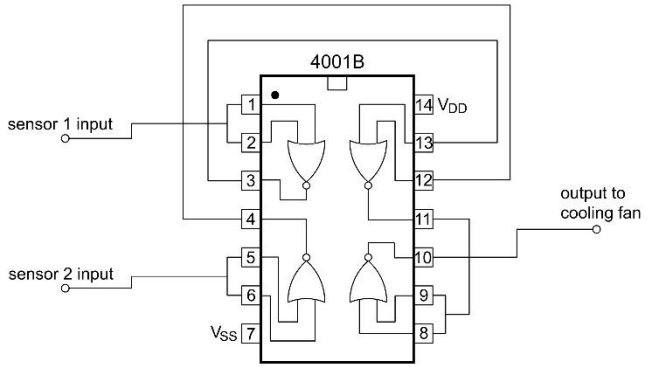 [4 × 1]	**4**	1 mark for each gate connections correct. 4 × 1 marks Allow ecf

https://xtremepape.rs/